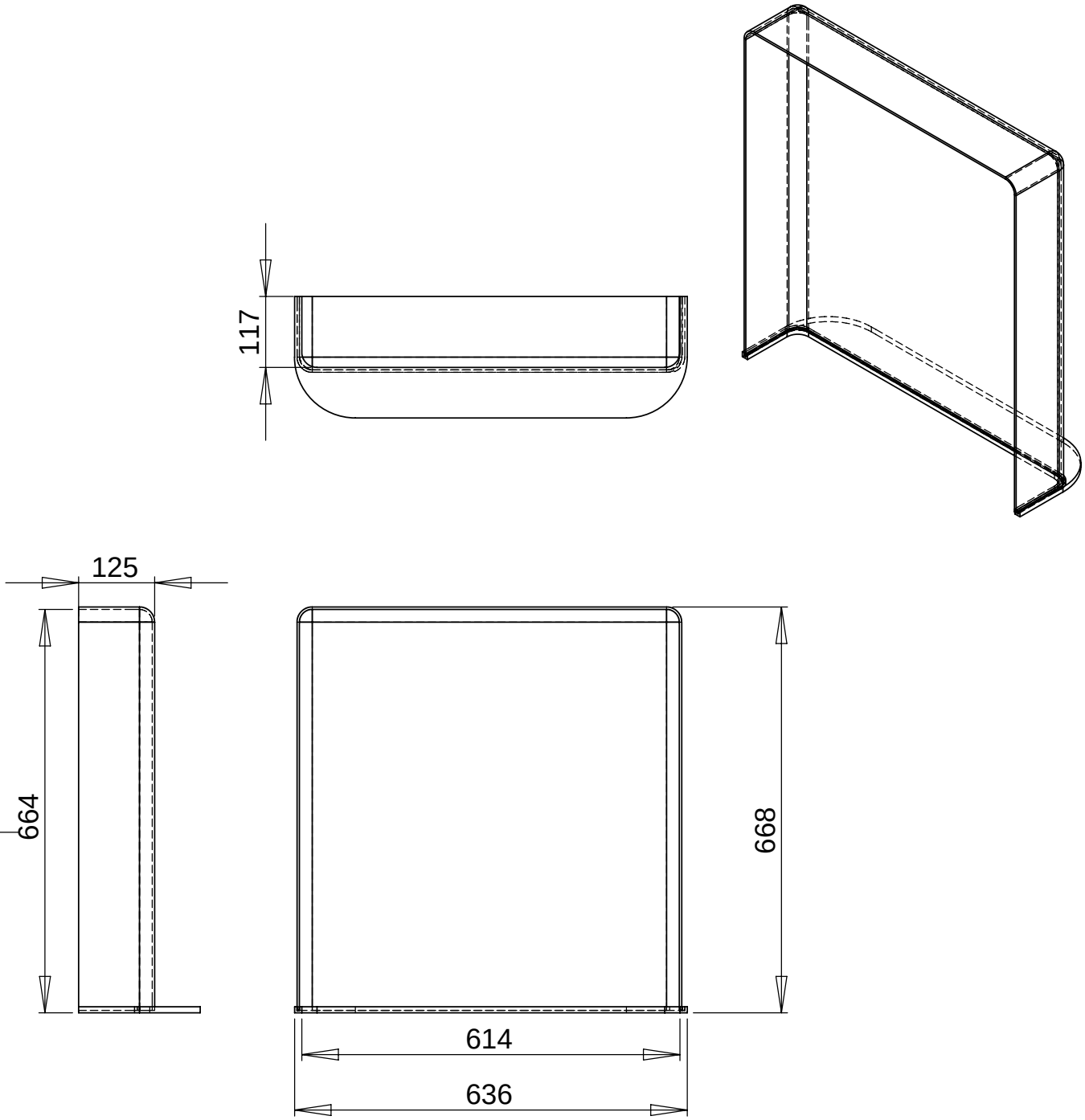

	H	W	D
External	668	636	200
Internal	664	614	117

Patent Pending GB2446275

UNLESS OTHERWISE SPECIFIED:
DIMENSIONS ARE IN MILLIMETERS
SURFACE FINISH:
TOLERANCES:
LINEAR:
ANGULAR:

FINISH:

DEBUR AND BREAK SHARP EDGES

DO NOT SCALE DRAWING

REVISION

Environmental Fireplace Solutions Ltd.

	NAME	SIGNATURE	DATE
DRAWN	AJB		
CHK'D			
APPV'D			
MFG			
Q.A			

MATERIAL:

WEIGHT:

TITLE:

Fireplace Heatsaver
with Base Stand.

DWG NO. A4EFS03

A4

SCALE:1:20

SHEET 1 OF 1